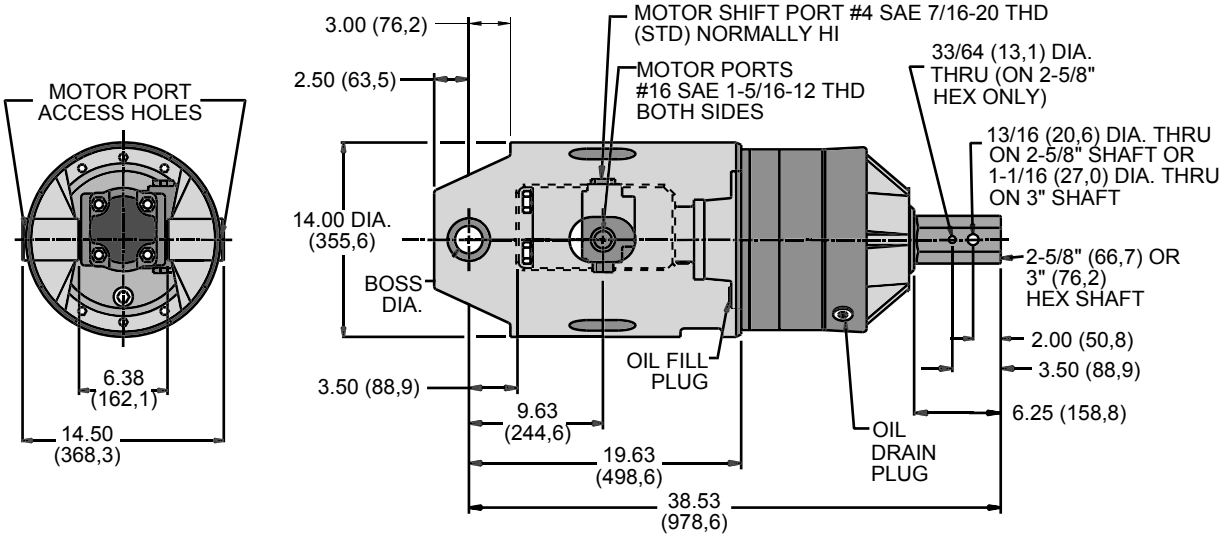
MOTOR PORT
ACCESS HOLES
6.38
(162,1)
14.50
(368,3)
3.00 (76,2)
2.50 (63,5)
14.00 DIA.
(355,6)
BOSS
DIA.
3.50 (88,9)
9.63
(244,6)
19.63
(498,6)
38.53
(978,6)
MOTOR SHIFT PORT #4 SAE 7/16-20 THD
(STD) NORMALLY HI
MOTOR PORTS
#16 SAE 1-5/16-12 THD
BOTH SIDES
OIL FILL
PLUG
OIL
DRAIN
PLUG
33/64 (13,1) DIA.
THRU (ON 2-5/8"
HEX ONLY)
13/16 (20,6) DIA. THRU
ON 2-5/8" SHAFT OR
1-1/16 (27,0) DIA. THRU
ON 3" SHAFT
2-5/8" (66,7) OR
3" (76,2)
HEX SHAFT
2.00 (50,8)
3.50 (88,9)
6.25 (158,8)